PZ MEDICAL
品臻影像

3025Z

Enlighten The World

Stable

Efficient

Innovative

3025Z is a high performance, cassette-sized flat panel detector. Battery stands by for at least 5 hours. Unique wireless communication protocol ensures fast and reliable transmission of a full resolution image within as short as 2.5 seconds, and no more than 5 seconds even in the worst environment. The detector acquires outstanding images with high DQE and high resolution. Equipped with highly sensitive and false proof AED function, the detector can be easily connected to and synchronized with any kind of generators.

Technical Parameter

Detector Technology	a-Si
Scintillator	CsI
Image Size	25.09×28.67cm(12×10in)
Pixels Matrix	2048×1792
Pixel Pitch	139μm
A/D Conversion	16bit
Maximum Linear Dose	110μGy
Minimum Detectable Dose	14μGy
Spatial Resolution	3.6LP/mm
Ghost (%, 300μGy, 60s)	<0.25%
Image Acquisition Time (Wired/Wireless)	1s/ 1～2s
X-ray Voltage Range	40-150KV
Battery standby time	5H
Data Interface	GigE/802.11n,ac
Power Dissipation	20W
Adapter Input	AC100-240V,50-60Hz
Adapter Output	DC 24V,60W
Dimensions	31.5×27.8×1.5cm
Detector Weight (Wireless with Batteries/Wired)	1.9kg/1.6kg
Detector Housing Material	Carbon,Alloy
Water tightness	IPX3
Operating Environment	5-35℃,10-75% RH
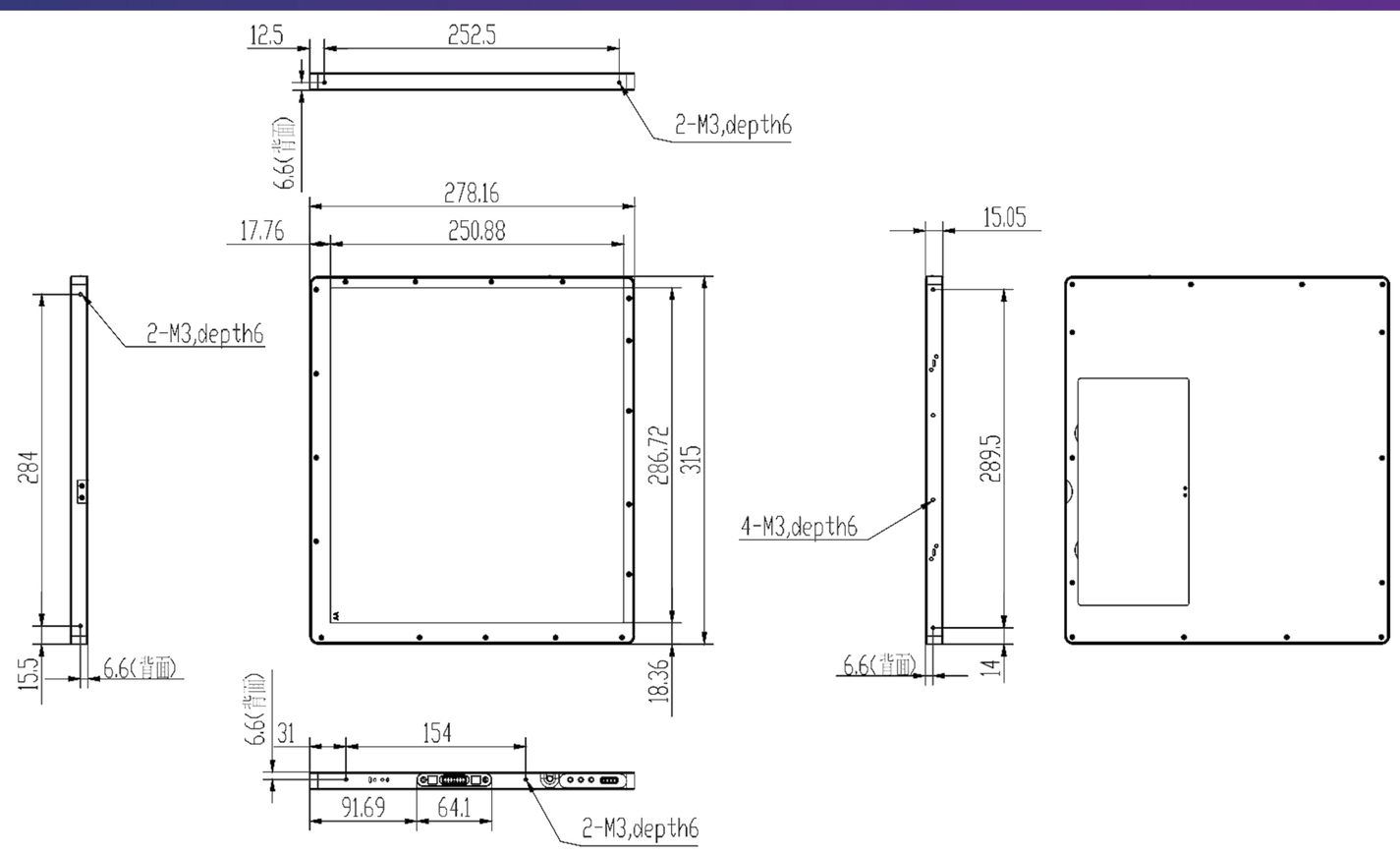
Outline Drawing